Design Pressure = 1000 PSI @ 120 °F
Min. Design Temperature = 20 °F @ 1000 PSI
Hydrotest Pressure = 1100 PSI

1000 PSI
MEGA SIDE PORT

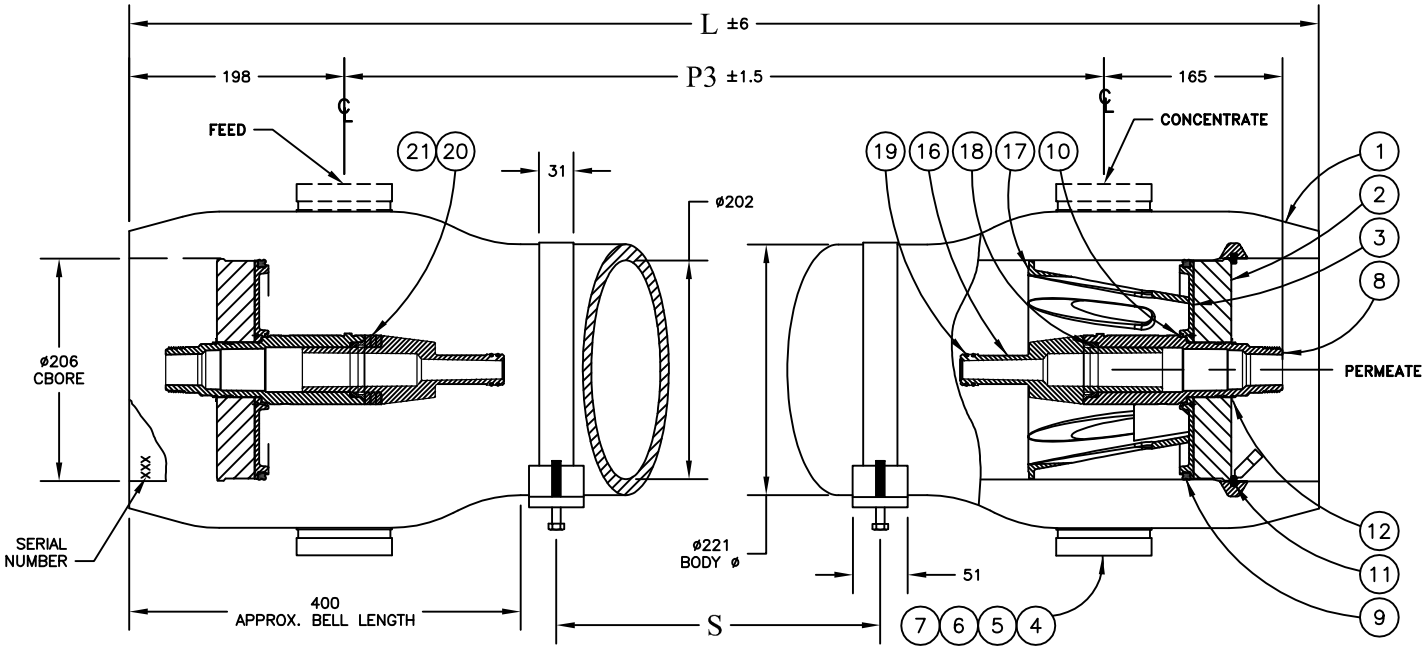

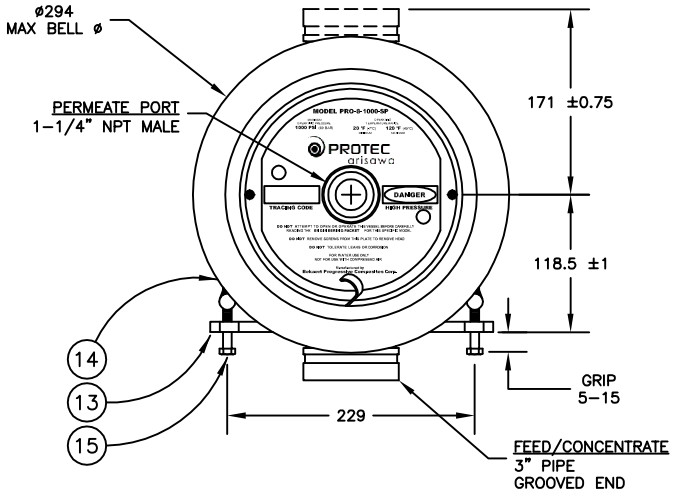

Munguia Facility

Shell Length Code	L mm	P3 mm	S Standard Span mm	Empty Weight kg
-1	1565	1168.4	1@635	73
-1.5	2073	1676.4	1@1067	79
-2	2581	2184.4	1@1422	85
-3	3597	3200.4	1@2032	99
-4	4613	4216.4	2@1626	112
-5	5629	5232.4	2@1981	125
-6	6645	6248.4	2@2337	138
-7	7663	7264.4	2@2692	151
-7.5	8169	7772.4	2@2896	158
-8	8679	8280.4	2@3048	165

ITEM	QTY	P/N	DESCRIPTION	MATERIAL
1	1	4080213	Shell	Filament Wound, Epoxy FRP
2	2	4080034	Bearing Plate	6061-T6 Aluminum, Hard Anodized
3	2	4080177-3	Sealing Plate	Noryl
4	2	4080214	Feed/Concentrate Port	SST Super Duplex
5	2	6121373	Retaining Ring, F/C Port	Stainless Steel, 316L
6	2	6180340N	O-Ring, F/C Port (3")	Ethylene Propylene
7	2	6121343	Retaining Ring, F/C Port	Stainless Steel, 316L
8	2	4080308	Permeate Port	Noryl
9	2	610442MK	Head Seal	Ethylene Propylene
10	2	6180229N	Permeate Port Seal	Ethylene Propylene
11	2	4080320	Retaining Ring w/ Finger Pull	Stainless Steel, 316L
12	2	6121200	Retaining Ring, Permeate Port	Stainless Steel, 316L
13	2*	4080175	Support Saddle	Thermoplastic Rubber
14	2	4080800	Strap Assembly [M8]	Stainless Steel, 316L
15	4	6150072	Strap Screw [M8x70mm]	Stainless Steel, A4
16	2	5080074	Membrane Adapter	Noryl
17	1	4080165-1	Thrust Cone	PVC Thermoplastic
18	2	6180326N	Adapter Seal	Ethylene Propylene
19	4	6180119N	PWT Seal	Ethylene Propylene
20	2	4080062	Shim, Adapter [5mm]	Noryl
21	2	4080704	Shim, Adapter [2mm]	Noryl

*3 each with shell length -4 and longer

NOTES:

DIMENSIONS IN MM.

FOR REFERENCE ONLY, NOT FOR CONSTRUCTION UNLESS CERTIFIED

SHIMMING OF THE SADDLE MAY BE REQUIRED

CENTER VESSEL ON 2 SUPPORTS AT SPAN(S) "S". OPTIONAL 3 POINT SUPPORT QUOTED SEPARATELY FOR SHELL LENGTHS -4 AND LONGER.

INCORRECT MANIFOLDING WILL CAUSE SEVERE LOCAL STRESS AROUND PORT AND MAY RESULT IN LEAKS AND PREMATURE FAILURE. TAKE EVERY PRECAUTION LISTED IN THIS PACKET.

INTERNAL PERMEATE PRESSURE MUST NOT EXCEED 125 PSI.

ASME SECTION X, RP CODE STAMP OPTIONAL

SPECIFICATIONS SUBJECT TO CHANGE WITHOUT NOTICE

PROTEC arisawa

PRO-8-1000-MSP

ENGR	QLTY	MRKT
BOA 21/10/16	AL 21/10/16	GCM 21/10/16

ECO	REVISED	DRAWING	REV
15082	21/10/16	101022	0